DWG. NO.	SH	REV

REVISIONS

ZONE	REV	DESCRIPTION	DATE	APPROVED
	A	PRELIMINARY RELEASE	4-95	
	B	ENGINEERING UPDATE	8-95	
	C	ENGINEERING UPDATE	10-95	
	D	ENGINEERING UPDATE	12-95	
	E	ENGINEERING UPDATE PRODUCTION RELEASE	2-96	

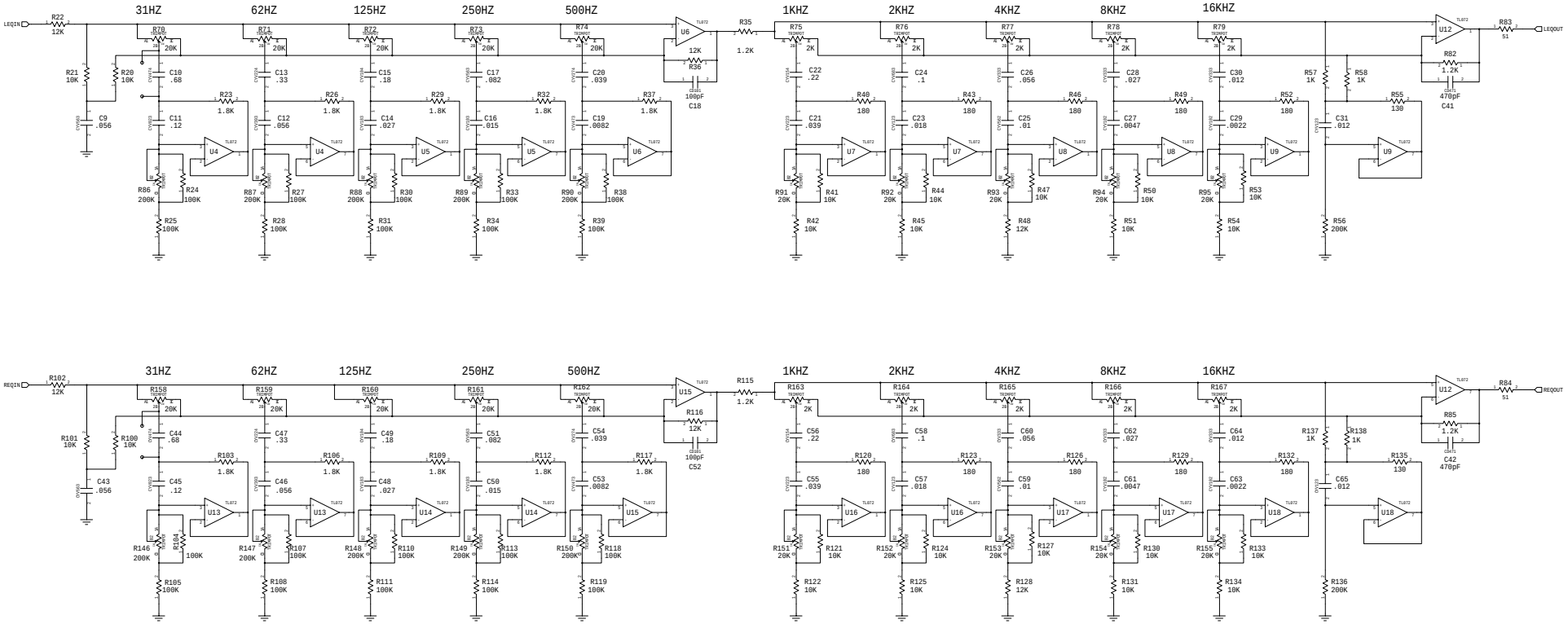

LAST USED LIST			

DO NOT SCALE DRAWING

	DATE
DRAWN	
CHECKED	
FINISH	

ROCKFORD CORPORATION
TEMPE AZ.

SCHEMATIC: SCHEMATIC, OEQ2

SIZE D | DWG NO. SCH-1060 | REV E

SCALE | SHEET 1 OF 4

DWG. NO.		SH	REV

REVISIONS

ZONE	REV	DESCRIPTION	DATE	APPROVED
	E	SEE SHT-1	2-96	

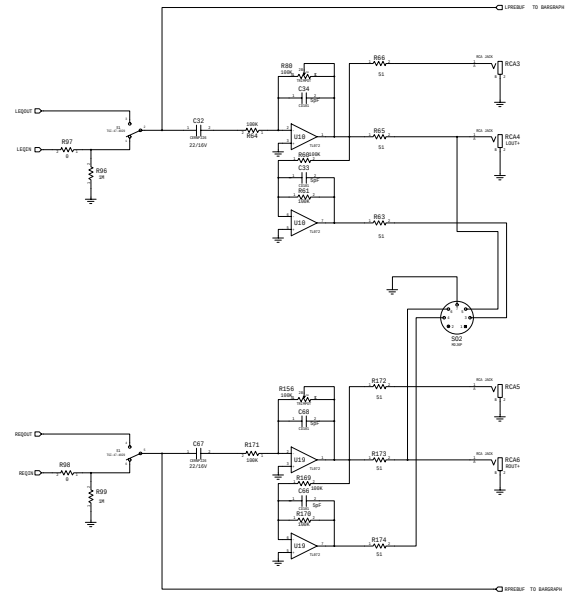

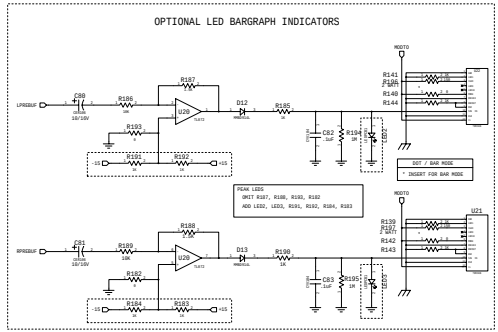

LAST USED LIST

DO NOT SCALE DRAWING

	DATE
DRAWN	
CHECKED	
FINISH	

ROCKFORD CORPORATION
TEMPE AZ.

SCHEMATIC: SCHEMATIC, OEQ-2

SIZE D | DWG. NO. SCH-1060 | REV E

SCALE | SHEET 2 OF 4

DWG. NO.	REV

REVISIONS

ZONE	REV	DESCRIPTION	DATE	APPROVED
	E	SEE SHT-1	2-96	

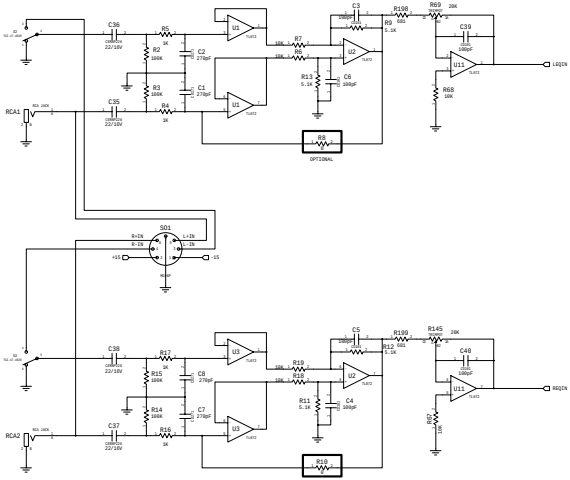

LAST USED LIST						

DO NOT SCALE DRAWING

	DATE
DRAWN	
CHECKED	
FINISH	

ROCKFORD CORPORATION
TEMPE AZ.

SCHEMATIC:
SCHEMATIC,
OEQ-2

SIZE D | DWG NO. SCH-1060 | REV E

SCALE | SHEET 3 OF 4

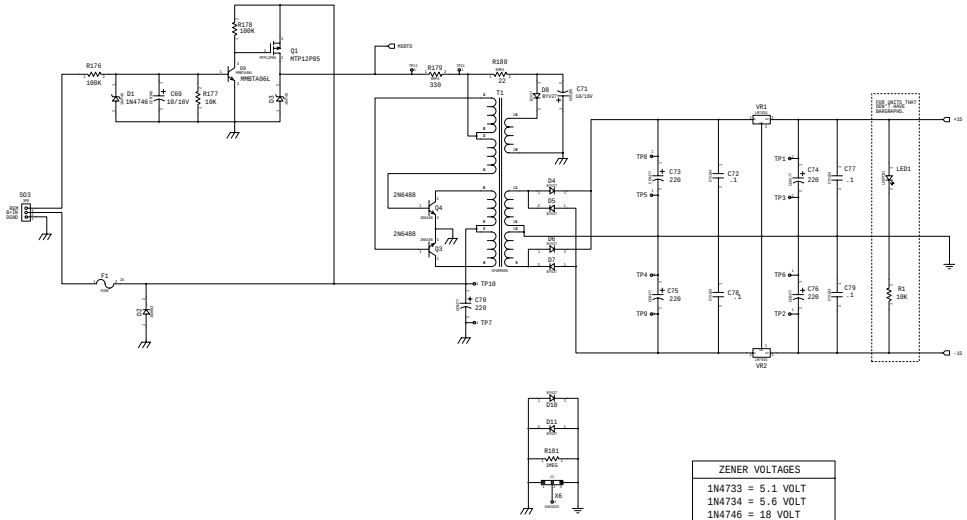

ZENER VOLTAGES
1N4733 = 5.1 VOLT
1N4734 = 5.6 VOLT
1N4746 = 18 VOLT
1N4750 = 27 VOLT

REVISIONS

ZONE	REV	DESCRIPTION	DATE	APPROVED
	E	SEE SHT-1	2-96	

LAST USED LIST

DO NOT SCALE DRAWING

ROCKFORD CORPORATION
TEMPE AZ.

SCHEMATIC:
SCHEMATIC,
OEQ-2

SIZE D | DWG. NO. SCH-1060 | REV E

SCALE | SHEET 4 OF 4